MACON stainless steel Coupling

Applications

For wine applications commonly used by wine producers in France.

Advantages

- Easy fitting and quick clamping.

Article No.	ND coupling mm	ND shank mm	Stock item
MACON Female stainless steel 316 L			
117002	40	38.0	•
117004	50	51.0	•
117000	60	63.0	•
5100461	70	70.0	•
117006	70	76.0	•
117025	80	76.0	•
117011	100	101.5	•
MACON Nut stainless steel 304			
116946	40	38.0	•
116949	50	51.0	•
116998	60	63.0	•
116952	70	70.0	•
116952	70	76.0	•
117022	80	76.0	•
117007	100	101.5	•
MACON Nut stainless steel 304, red EPDM coated			
5100493	40		•
5100494	50		•
MACON Male stainless steel 316 L			
117001	40	38.0	•
117003	50	51.0	•
116999	60	63.0	•
5100462	70	70.0	•
117005	70	76.0	•
117026	80	76.0	•
Seal, natural rubber, white			
5100588	40	38.0	*1*
5100589	50	51.0	*1*
5100590	60	63.0	*1*
5100591	70	70.0	*1*
5100591	70	76.0	*1*
5100592	80	76.0	*1*
5100593	100	101.5	*1*
Ferrule			
Specific ferrules must be imperatively used to swage these couplings (see below " Swaging stainless steel Ferrules and Rings ")			

• = Stock item.
1 = Non stock.

Technical description

MACON = Conical thread.
Note that some wine districts use special thread.
This kind of swaged coupling requires following of swaging procedures issued by Trelleborg.

Complementary information

The couplings are delivered without seals.

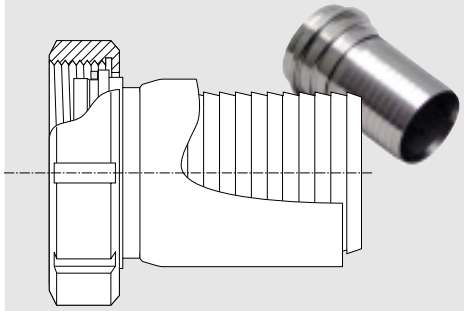

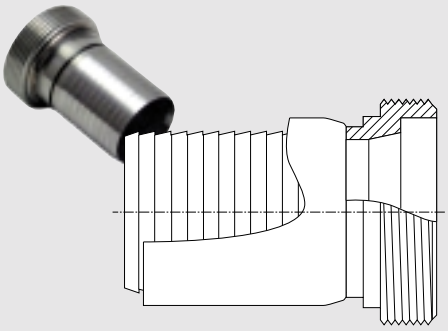

17 - 02 - 2004

Couplings for food hoses